PRESIDENTIAL BILLIARDS

12' Reagan Shuffleboard

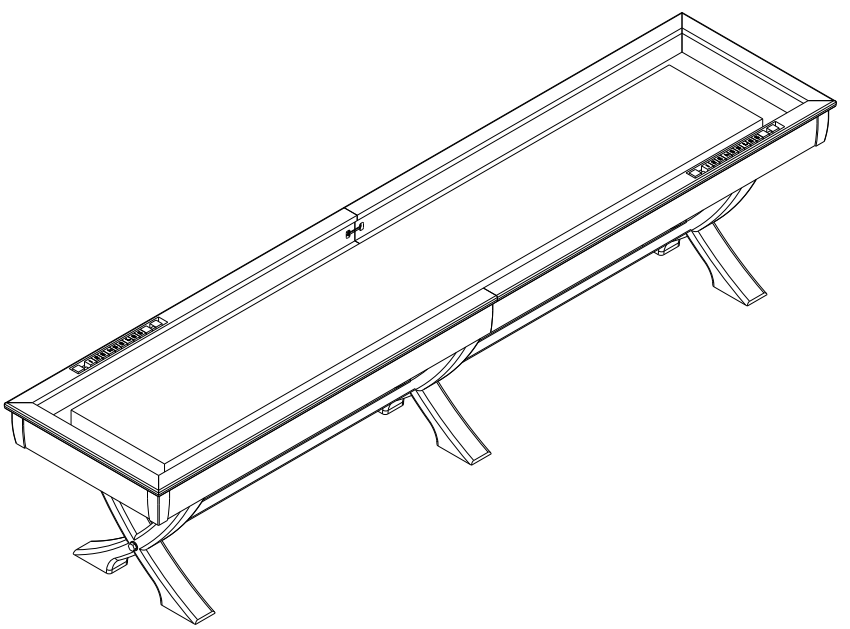

Installation Instructions

Reagan Shuffleboard Components

PACKAGE	ITEM#		DESCRIPTION	QTY.
LEG	1		END LEG	2
	2		MIDDLE LEG	1
	3		LEG BEAM	2
CABINET	4	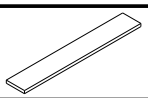	PLAYBOARD	1
	5	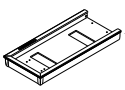	CABINET	2
	6		WOOD JOINT M8x40mm	4
	7		WOOD JOINT M10x50mm	4

Reagan Shuffleboard Hardware

PACKAGE	ITEM#		DESCRIPTION	QTY.
LEG	H1	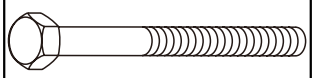	HEX BOLT 23/32" X 6-11/16"(M18X150mm)	2
	H2		FLAT WASHER 23/32" I.D.	2
	H3		HEX HEAD CROSS BOLT 5/16" X 2"(M8X50mm)	12
	H4		FLAT WASHER 5/16" I.D.	12
CABINET	H5		FLAT HEAD SCREW 1/4" X 1-5/8"(M6X40mm)	6
	H6		STUD BOLT 5/16" X 5-1/2"(M8X140mm)	2
	H7		FLAT WASHER 5/16" I.D.	4
	H8		HEX NUT 5/16" I.D.	4
	H9		HEX HEAD CROSS BOLT 5/16" X 1"(M8X25mm)	48
	H10		FLAT WASHER 5/16" I.D.	48
	H11	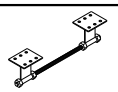	CLIMATIC ADJUSTERS	4

FIG.1

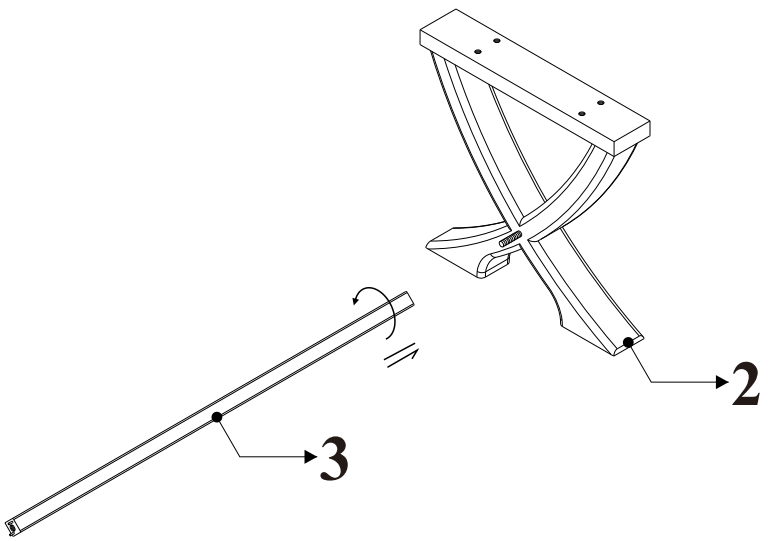

FIG.2

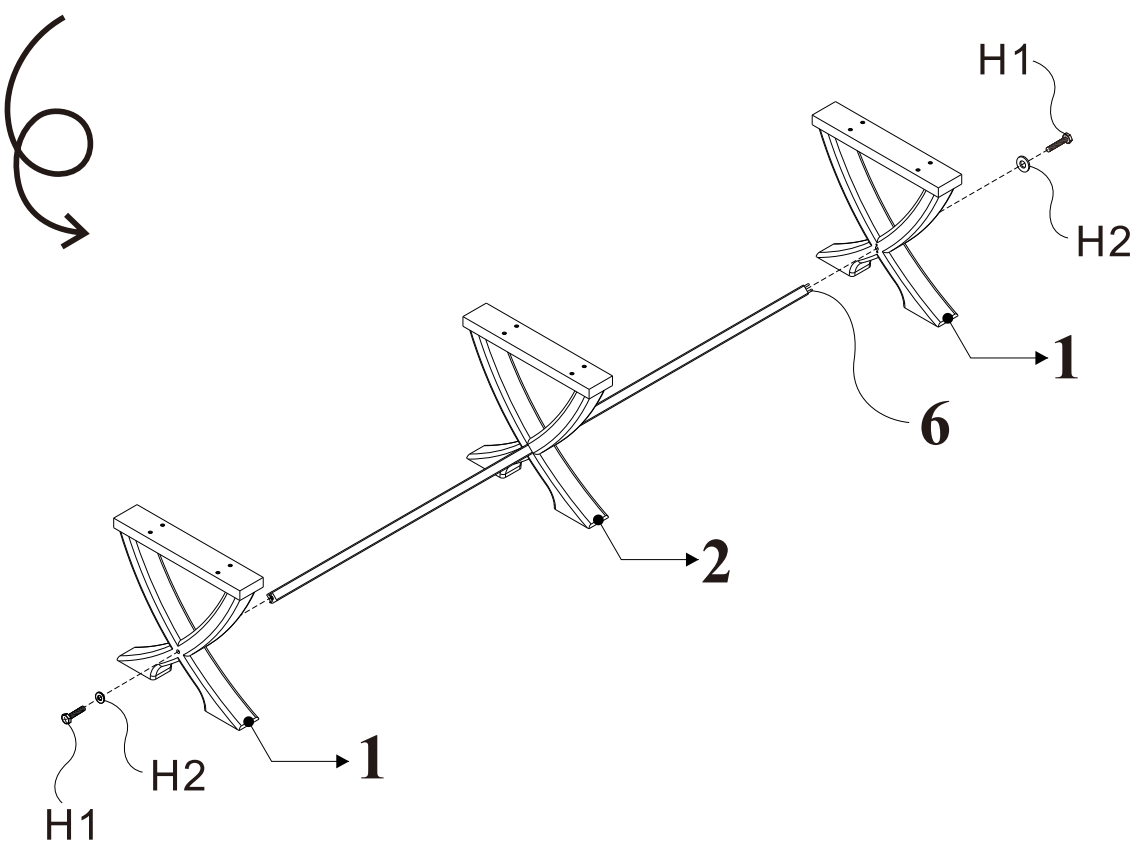

FIG.3

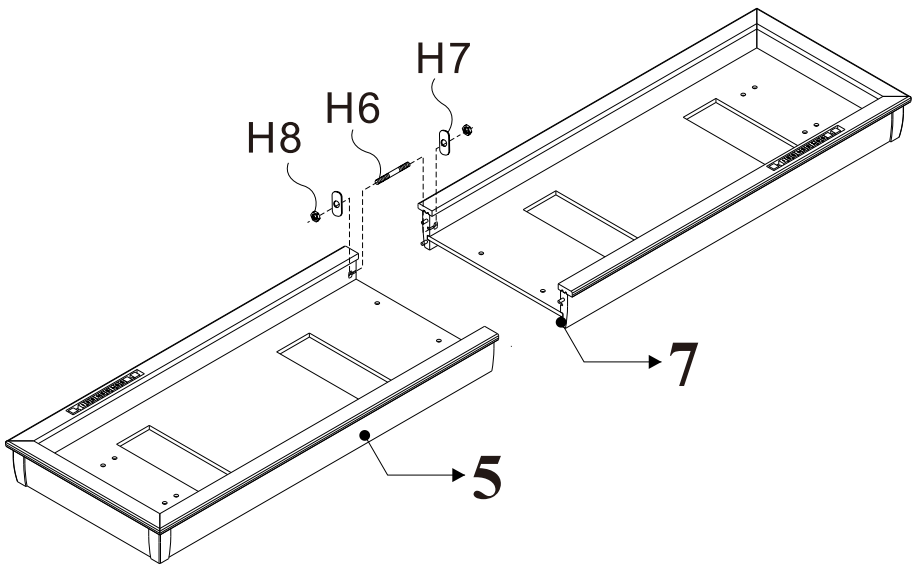

FIG.4

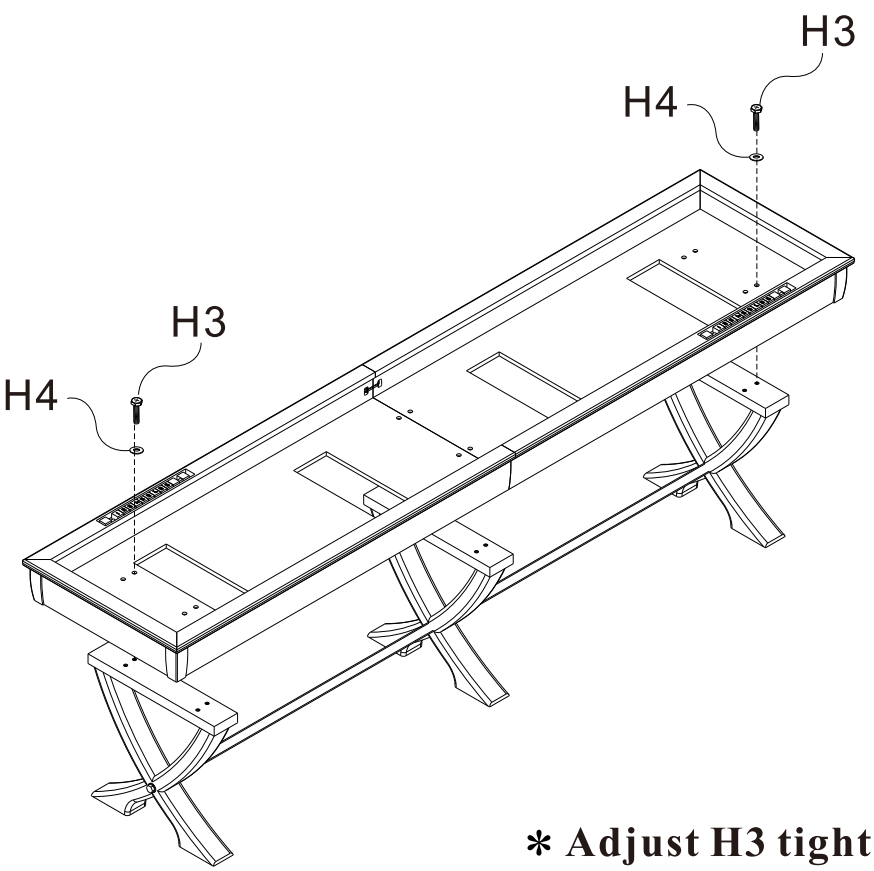

*** Adjust H3 tightly after cabinet is leveled**

FIG.5

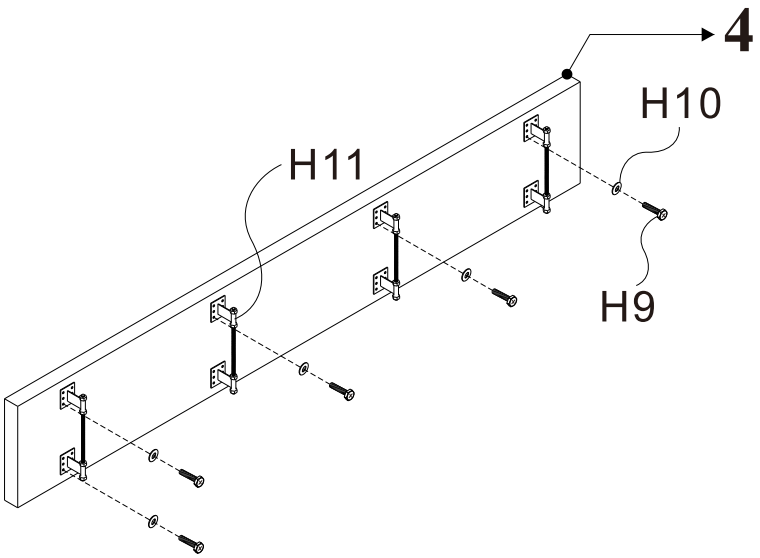

FIG.6

＊ Drill some guiding-holes with a drill before attaching H5 screws. (The diameter of the drill bit must be ≤ 3/16".)

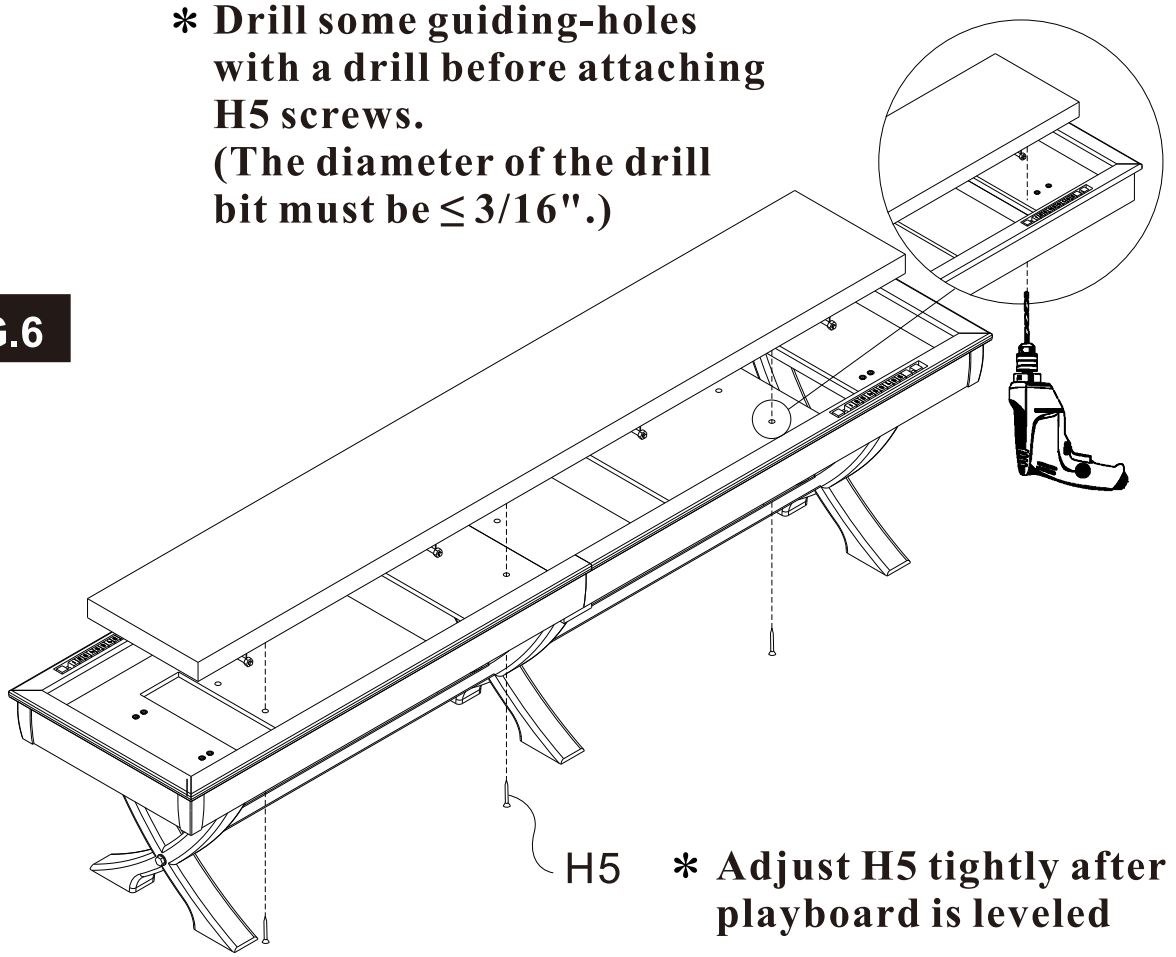

＊ Adjust H5 tightly after playboard is leveled
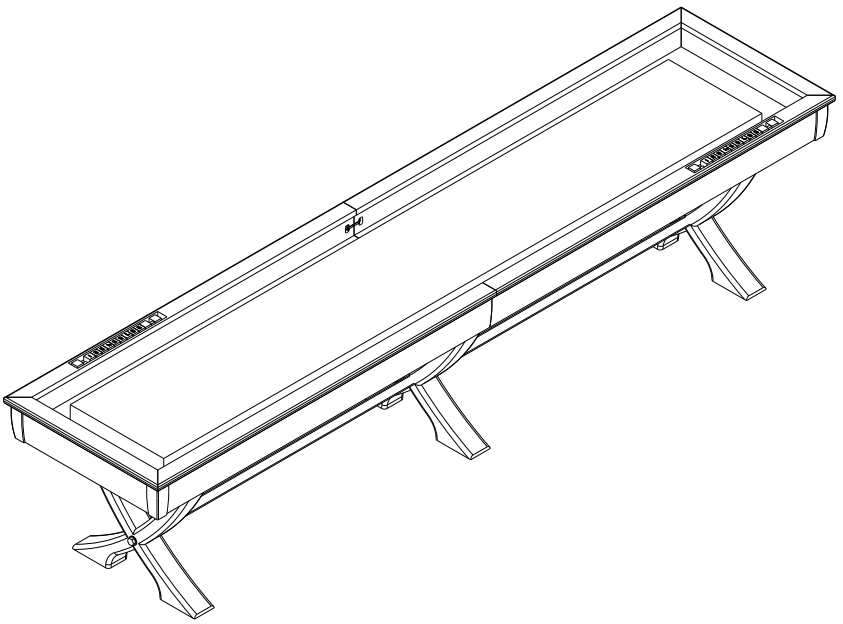
Finish